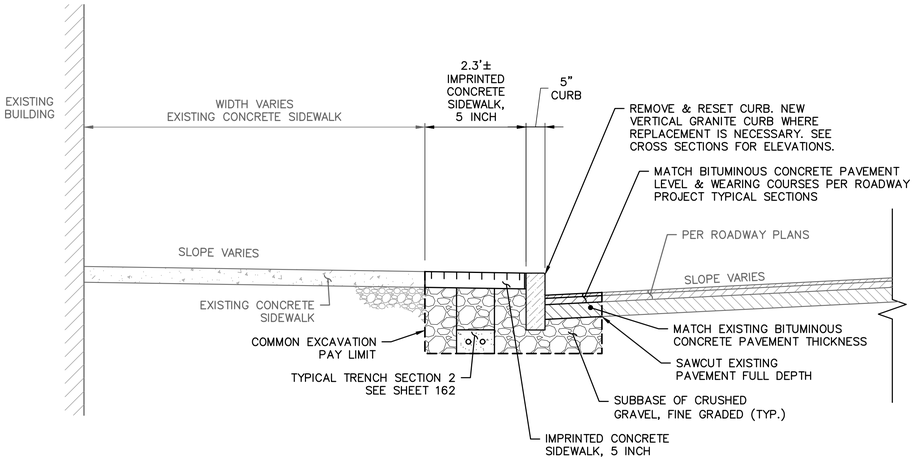

N1 TYPICAL MAIN STREET NORTH IMPRINTED CONCRETE SIDEWALK

NOT TO SCALE
STA. 20+20 LT TO STA. 20+56 LT
STA. 20+84 LT TO STA. 23+46 LT
STA. 24+07 LT TO STA. 24+58 LT

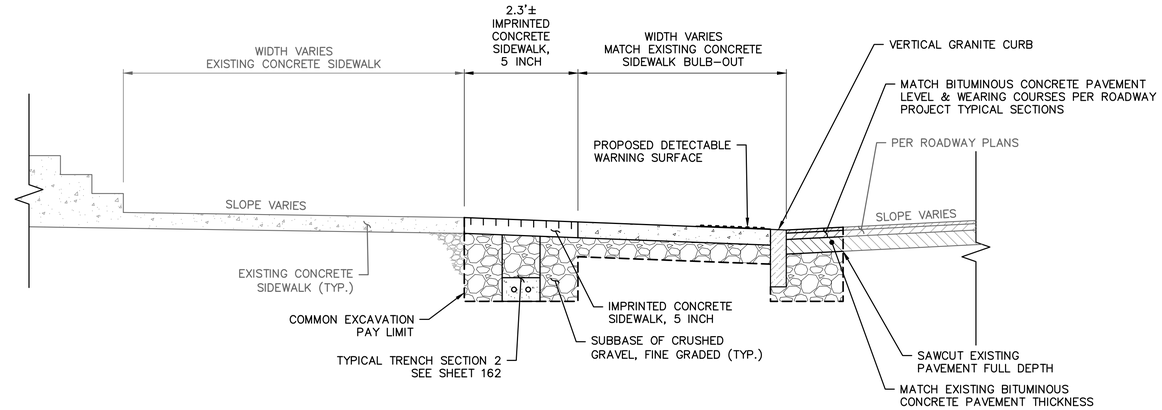

N2 TYPICAL MAIN STREET NORTH IMPRINTED CONCRETE SIDEWALK AT EXISTING BULB-OUT

NOT TO SCALE
STA. 23+90 LT TO STA. 24+07 LT

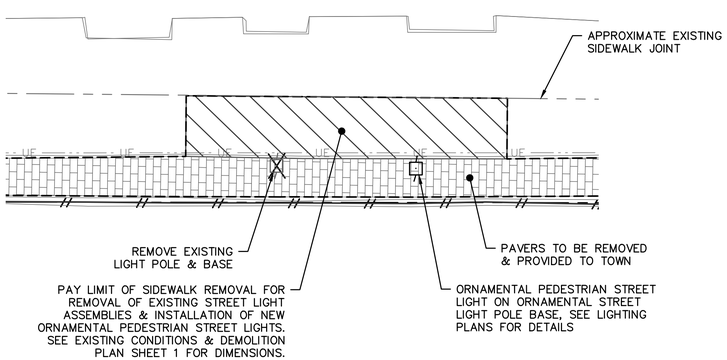

TYPICAL MAIN STREET NORTH SIDEWALK REMOVAL AT EXISTING & PROPOSED LIGHT POLES

NOT TO SCALE

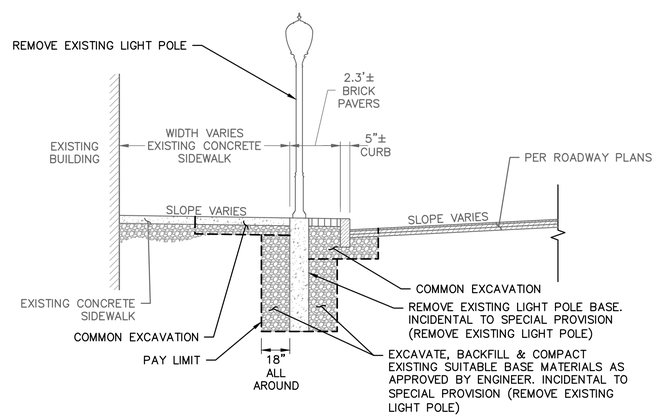

TYPICAL MAIN STREET NORTH EXISTING LIGHT POLE EXCAVATION

NOT TO SCALE

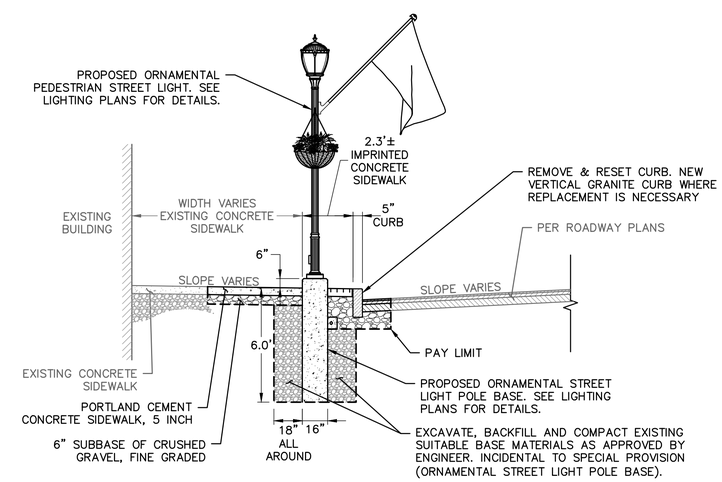

TYPICAL MAIN STREET NORTH PROPOSED LIGHT POLE FOUNDATION

NOT TO SCALE

PORTLAND CEMENT CONCRETE SIDEWALK NOTES

1. ALL ITEMS LISTED BELOW SHALL BE CONSIDERED INCIDENTAL TO 618.10 PORTLAND CEMENT CONCRETE SIDEWALK, 5 INCH.
2. ¾" FOAM EXPANSION JOINT FILLER BETWEEN BUILDINGS AND SIDEWALKS.
3. CLEAR POLY BOND BREAKER BETWEEN VERTICAL GRANITE CURB AND IMPRINTED CONCRETE SIDEWALK, 5 INCH.
4. ¼" FOAM EXPANSION JOINT FILLER BETWEEN IMPRINTED CONCRETE SIDEWALK, 5 INCH AND PORTLAND CEMENT CONCRETE SIDEWALK, 5 INCH.

PROJECT NAME: BRISTOL	
PROJECT NUMBER: STP PC20(2)	
FILE NAME: 425097_TypSec.dwg	PLOT DATE: 10/4/2019
PROJECT LEADER: L. CONGER	DRAWN BY: G. ORGANEK
DESIGNED BY: G. ORGANEK	CHECKED BY: M. MEARS
NORTH SIDEWALK TYPICAL SECTIONS SHEET	SHEET 150 OF 174

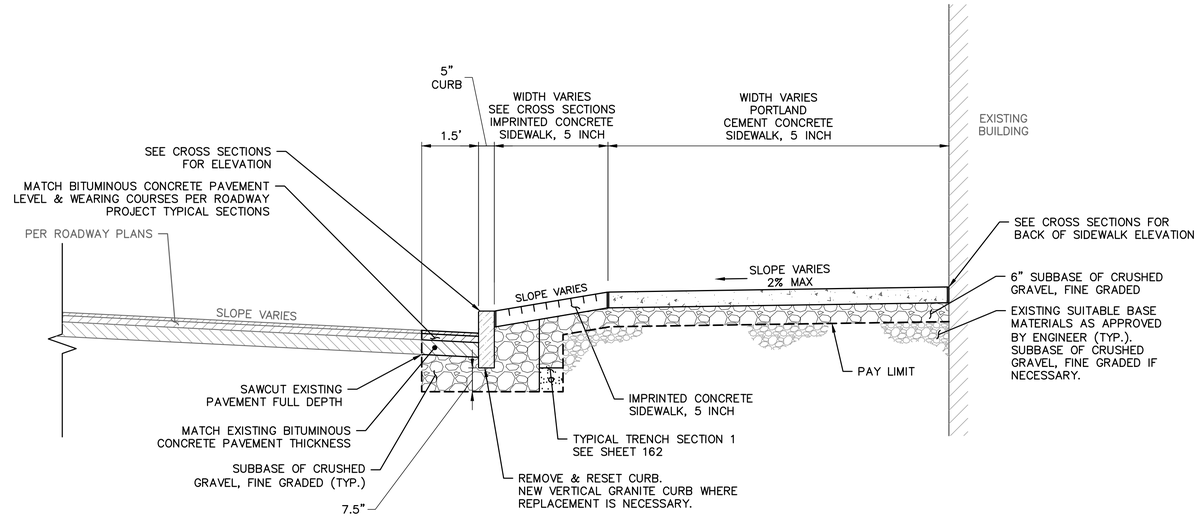

TYPICAL MAIN STREET SOUTH SIDEWALK

NOT TO SCALE

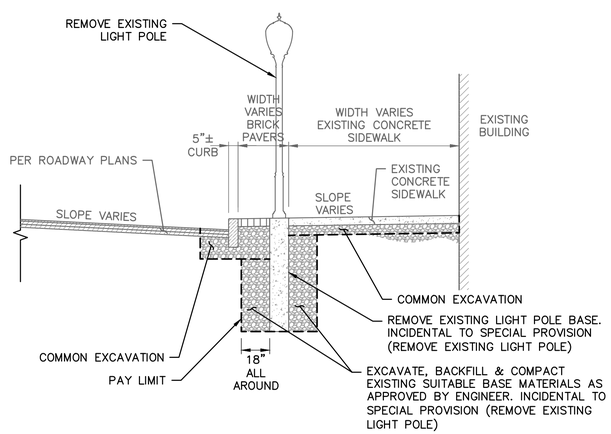

TYPICAL MAIN STREET SOUTH EXISTING LIGHT POLE EXCAVATION

NOT TO SCALE

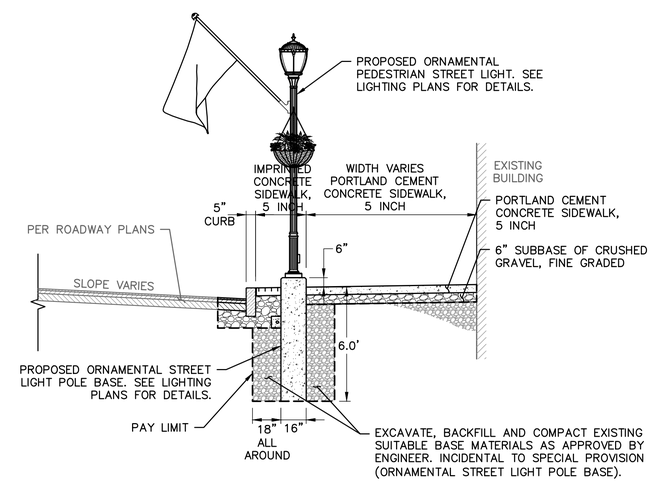

TYPICAL MAIN STREET SOUTH PROPOSED LIGHT POLE FOUNDATION

NOT TO SCALE

PORTLAND CEMENT CONCRETE SIDEWALK NOTES

1. ALL ITEMS LISTED BELOW SHALL BE CONSIDERED INCIDENTAL TO 618.10 PORTLAND CEMENT CONCRETE SIDEWALK, 5 INCH.
2. ¾" FOAM EXPANSION JOINT FILLER BETWEEN BUILDINGS AND SIDEWALKS.
3. CLEAR POLY BOND BREAKER BETWEEN VERTICAL GRANITE CURB AND IMPRINTED CONCRETE SIDEWALK, 5 INCH.
4. ¾" FOAM EXPANSION JOINT FILLER BETWEEN IMPRINTED CONCRETE SIDEWALK, 5 INCH AND PORTLAND CEMENT CONCRETE SIDEWALK, 5 INCH.

PROJECT NAME: BRISTOL	
PROJECT NUMBER: STP PC20(2)	
FILE NAME: 425097_TypSec.dwg	PLOT DATE: 10/4/2019
PROJECT LEADER: L. CONGER	DRAWN BY: G. ORGANEK
DESIGNED BY: G. ORGANEK	CHECKED BY: M. MEARS
SOUTH SIDEWALK TYPICAL SECTIONS SHEET	SHEET 151 OF 174

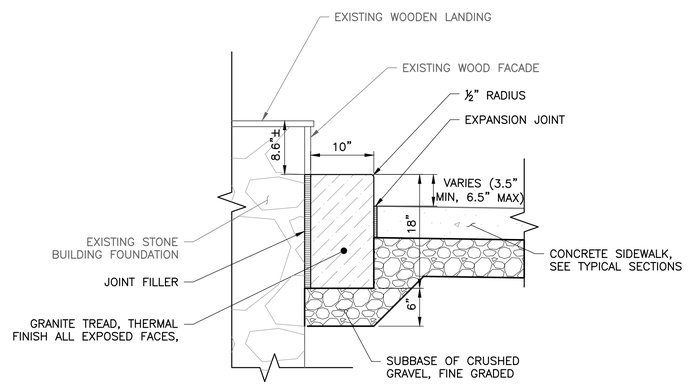

GRANITE STEP DETAIL AT KIMBALL'S

NOT TO SCALE

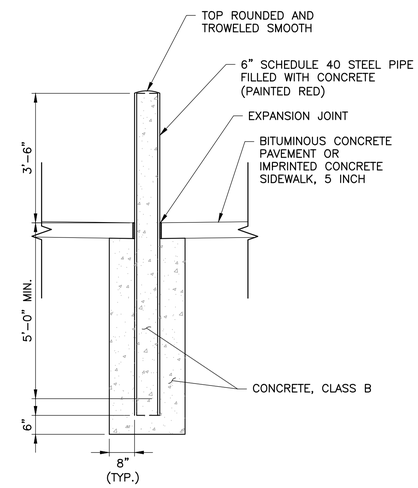

BOLLARD DETAIL

NOT TO SCALE

PROJECT NAME: BRISTOL	
PROJECT NUMBER: STP PC20(2)	
FILE NAME: 425097_DET.dwg	PLOT DATE: 10/4/2019
PROJECT LEADER: L. CONGER	DRAWN BY: G. ORGANEK
DESIGNED BY: G. ORGANEK	CHECKED BY: M. MEARS
SIDEWALK DETAIL SHEET	SHEET 152 OF 174

TRAVERSE TIES

HVCTRL # 6

NORTH = 1488139.63
EAST = 595944.22
ELEV. = 569.48
SCALE: 1" = 50'

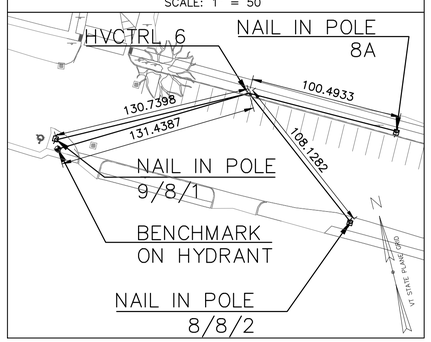

HVCTRL # 7

NORTH = 1488566.63
EAST = 595826.20
ELEV. = 571.39
SCALE: 1" = 40'

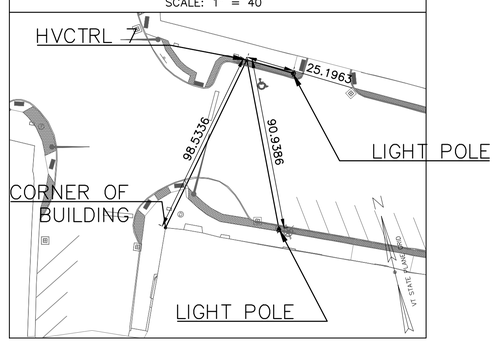

HVCTRL # 8

NORTH = 1489021.58
EAST = 595708.50
ELEV. = 559.69
SCALE: 1" = 20'

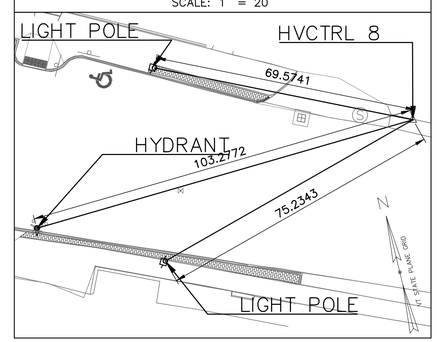

HVCTRL # 9

NORTH = 1489487.65
EAST = 595462.21
ELEV. = 557.24
SCALE: 1" = 40'

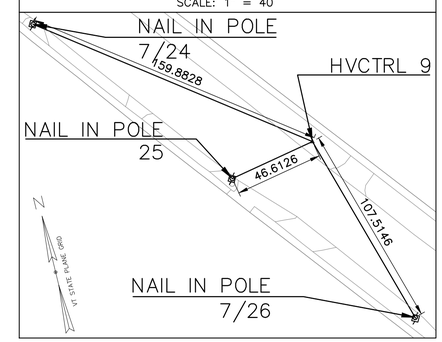

DATUM
VERTICAL NAVD 88
HORIZONTAL NAD 83 (2011)
CLOSURE N/A

PROJECT NAME: BRISTOL
PROJECT NUMBER: STP PC20(2)

FILE NAME: 425097_Tie.dwg
PROJECT LEADER: L. CONGER
DESIGNED BY: G. ORGANEK
TIE SHEET

PLOT DATE: 10/4/2019
DRAWN BY: G. ORGANEK
CHECKED BY: M. MEARS
SHEET 153 OF 174

NORTH STREET

EXISTING CIRCUIT BREAKER BOX

EXISTING TRAFFIC SIGNAL UTILITY

PAY LIMIT OF SIDEWALK REMOVAL FOR REMOVAL OF EXISTING STREET LIGHT ASSEMBLIES & INSTALLATION OF NEW ORNAMENTAL PEDESTRIAN STREET LIGHTS (TYP.)

ASSUMED LOCATION OF UNDERGROUND ELECTRIC FOR SITE LIGHTING (TYP.)

TRENCH EXCAVATION OF EARTH

SEE ROADWAY PLAN SHEETS & TRAFFIC SIGN SUMMARY SHEETS FOR SIGN REMOVAL & REPLACEMENTS

EXISTING PULL BOXES

PROTECT EXISTING HYDRANT

EXISTING PULL BOX

EXISTING PAVERS TO BE REMOVED (TYP.)

REMOVE (2) EXISTING BOLLARDS

REMOVE EXISTING LIGHT POLE & BASE (TYP.)

REMOVE AND RESET CURB (TYP.)

TRENCH EXCAVATION OF EARTH SEE LIGHTING & ELECTRICAL PLANS

MAIN STREET

SAW CUT & REMOVE PAVEMENT PER TYPICAL SECTION. SEE SHEET 151. INCIDENTAL TO 203.15 COMMON EXCAVATION.

DEMOLITION IN THIS AREA PER ROADWAY PLANS

EXISTING PULL BOX

EXISTING TRAFFIC SIGNAL (TYP.)

TBM
EL. = 570.85
VERTICAL USGS MARKER SET INTO SIDE OF TOWN HALL BUILDING

RECYCLED READING OF VERMONT

EXISTING PULL BOX

APPROXIMATE LOCATION OF UNDERGROUND WATER SERVICE (TYP.)

APPROXIMATE LOCATION OF UNDERGROUND COMMUNICATIONS SERVICE (TYP.)

THE REAL ESTATE COMPANY OF VERMONT

BRISTOL LAUNDRY

THE BOBCAT CAFE

WALLACE REALTY

VACANT

CUBBER'S RESTAURANT

SCENTSATIONS FLOWERS & GIFTS

BRIST CLIFFS

SOUTH STREET

MATCH LINE STA. 1+50 & STA. 21+75: SEE NEXT SHEET

VT STATE PLANE GRID

LEGEND

X	LIGHT POLE TO BE REMOVED & PROVIDED TO TOWN
	CURB TO BE REMOVED & RESET/PROVIDED TO TOWN
	LIMITS OF PAVERS TO BE REMOVED & PROVIDED TO TOWN
	LIMITS OF CONCRETE SIDEWALK TO BE REMOVED & PROVIDED TO TOWN
	LIMITS OF PAVEMENT TO BE REMOVED & PROVIDED TO TOWN

SCALE IN FEET

10 0 5 10 20 40

NOTES:

1. TOPO SURVEY COMPLETED BY DUBOIS & KING, INC. ON 10/11/2018 AND 4/2/2019.
2. UNDERGROUND UTILITIES ARE BASED ON GREEN MOUNTAIN ENGINEERING SEWER IMPROVEMENT PLANS DATED 7/13/1992 AND STANTEC PLANS DATED 4/29/2014. THE CONTRACTOR IS TO VERIFY THE LOCATION OF ALL UNDERGROUND UTILITIES PRIOR TO EXCAVATION.
3. FOR LIMITS OF DEMOLITION OF ROADWAY SEE ROADWAY PLANS.

PROJECT NAME: BRISTOL
PROJECT NUMBER: STP PC20(2)

FILE NAME: 425097_Demo.dwg
PROJECT LEADER: L. CONGER
DESIGNED BY: G. ORGANEK
EXISTING CONDITIONS & DEMOLITION PLAN SHEET 1

PLOT DATE: 10/4/2019
DRAWN BY: G. ORGANEK
CHECKED BY: M. MEARS

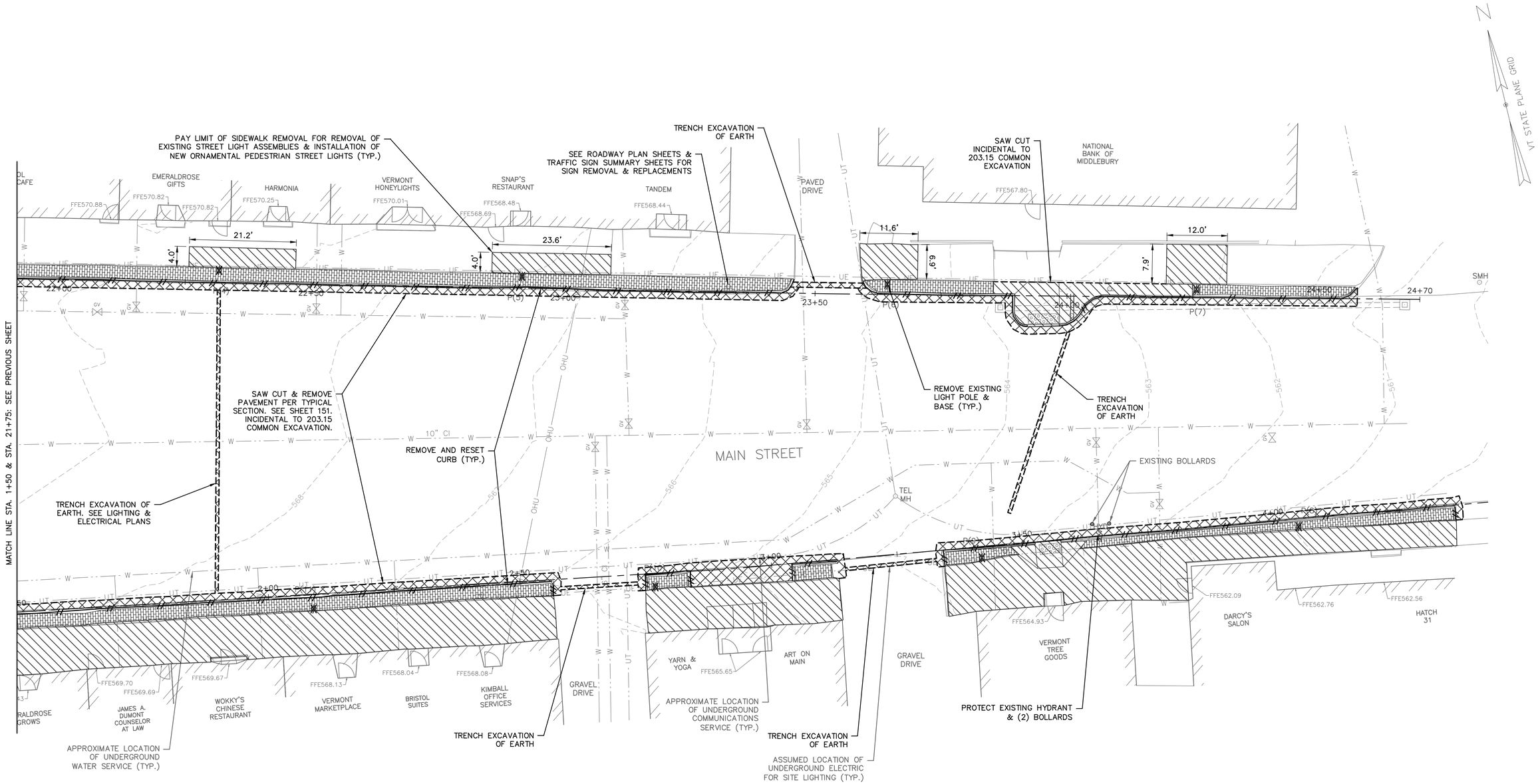

LEGEND

- X — LIGHT POLE TO BE REMOVED & PROVIDED TO TOWN
- CURB TO BE REMOVED & RESET/PROVIDED TO TOWN
- LIMITS OF PAVERS TO BE REMOVED & PROVIDED TO TOWN
- LIMITS OF CONCRETE SIDEWALK TO BE REMOVED & PROVIDED TO TOWN
- LIMITS OF PAVEMENT TO BE REMOVED & PROVIDED TO TOWN

SCALE IN FEET

10 0 5 10 20 40

NOTES:

1. TOPO SURVEY COMPLETED BY DUBOIS & KING, INC. ON 10/11/2018 AND 4/2/2019.
2. UNDERGROUND UTILITIES ARE BASED ON GREEN MOUNTAIN ENGINEERING SEWER IMPROVEMENT PLANS DATED 7/13/1992 AND STANTEC PLANS DATED 4/29/2014. THE CONTRACTOR IS TO VERIFY THE LOCATION OF ALL UNDERGROUND UTILITIES PRIOR TO EXCAVATION.
3. FOR LIMITS OF DEMOLITION OF ROADWAY SEE ROADWAY PLANS.

PROJECT NAME: BRISTOL
PROJECT NUMBER: STP PC20(2)

FILE NAME: 425097_Demo.dwg	PLOT DATE: 10/4/2019
PROJECT LEADER: L. CONGER	DRAWN BY: G. ORGANEK
DESIGNED BY: G. ORGANEK	CHECKED BY: M. MEARS
EXISTING CONDITIONS & DEMOLITION PLAN SHEET 2	SHEET 155 OF 174

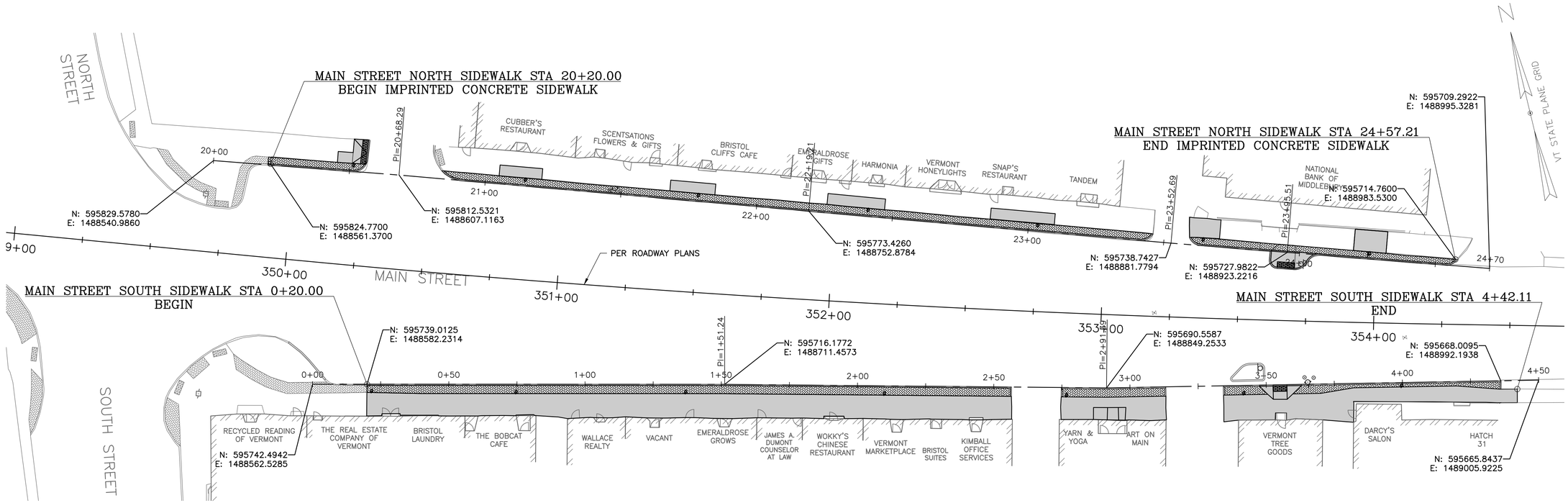

PLAN

SCALE IN FEET

20 0 10 20 40 80

PROJECT NAME: BRISTOL	
PROJECT NUMBER: STP PC20(2)	
FILE NAME: 425097_DATA.dwg	PLOT DATE: 10/4/2019
PROJECT LEADER: L. CONGER	DRAWN BY: G. ORGANEK
DESIGNED BY: G. ORGANEK	CHECKED BY: M. MEARS
MAIN STREET ALIGNMENTS SHEET	SHEET 156 OF 174

MAIN STREET NORTH

REMOVING AND RESETTING CURB
STA. 20+20 LT TO STA. 20+57 LT
STA. 20+84 LT TO STA. 21+75 LT

PORTLAND CEMENT CONCRETE SIDEWALK, 5 INCH
STA. 20+45 LT TO STA. 20+56 LT
STA. 21+05 LT TO STA. 21+21 LT
STA. 21+68 LT TO STA. 21+84 LT

MAIN STREET NORTH

SPECIAL PROVISION (ORNAMENTAL STREET LIGHT POLE BASE)
STA. 20+51 LT
STA. 21+14 LT
STA. 21+78 LT

SPECIAL PROVISION (IMPRINTED CONCRETE SIDEWALK, 5 INCH)
STA. 20+19 LT TO STA. 20+56 LT
STA. 20+84 LT TO STA. 21+75 LT

MAIN STREET SOUTH

REMOVING AND RESETTING CURB
STA. 0+20 RT TO STA. 1+50 RT

PORTLAND CEMENT CONCRETE SIDEWALK, 5 INCH
STA. 0+20 RT TO STA. 1+50 RT

SPECIAL PROVISION (ORNAMENTAL STREET LIGHT POLE BASE)
STA. 0+22 RT
STA. 0+75 RT
STA. 1+37 RT

SPECIAL PROVISION (IMPRINTED CONCRETE SIDEWALK, 5 INCH)
STA. 0+20 RT TO STA. 1+50 RT

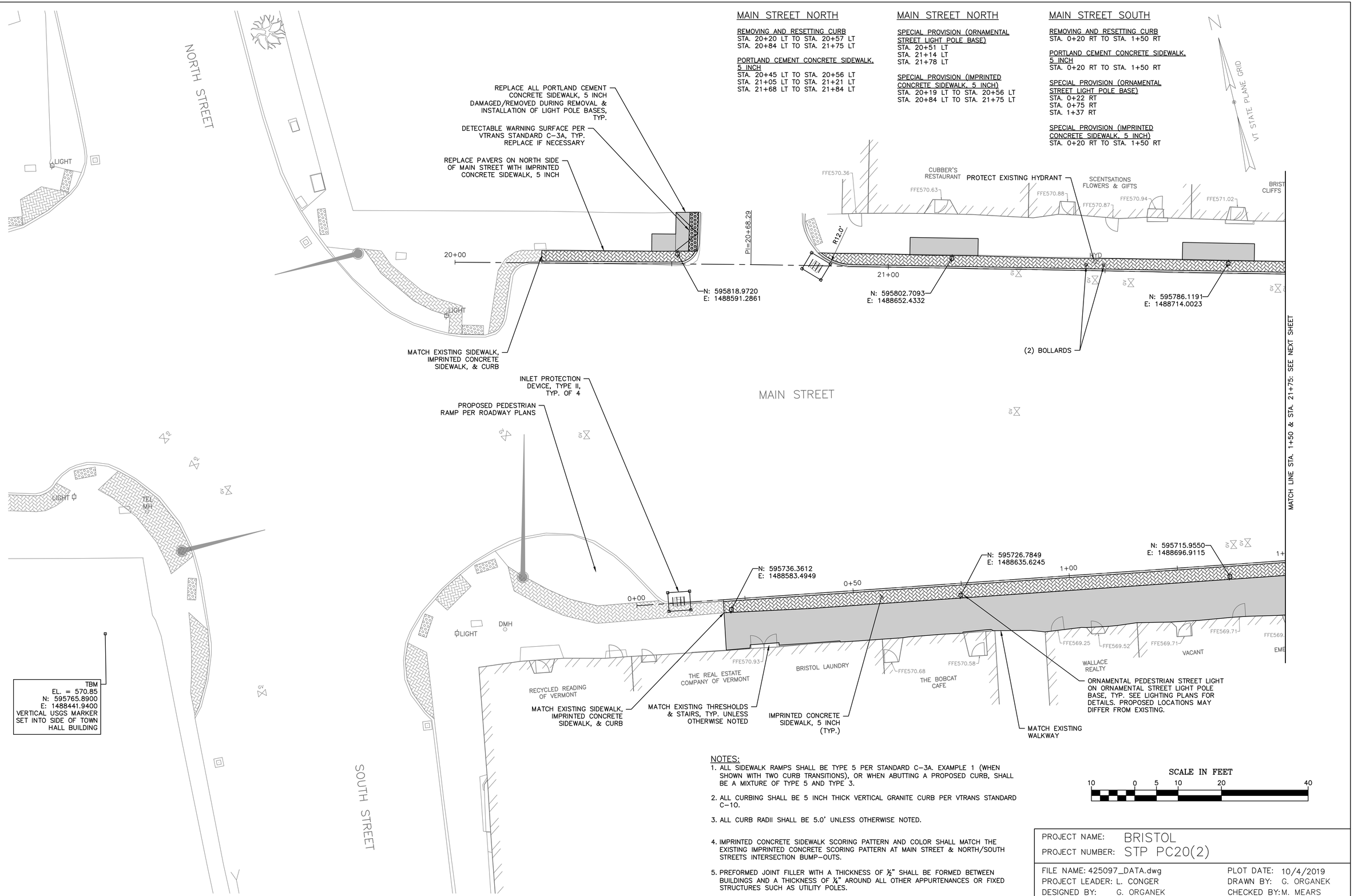

NOTES:

1. ALL SIDEWALK RAMPS SHALL BE TYPE 5 PER STANDARD C-3A. EXAMPLE 1 (WHEN SHOWN WITH TWO CURB TRANSITIONS), OR WHEN ABUTTING A PROPOSED CURB, SHALL BE A MIXTURE OF TYPE 5 AND TYPE 3.
2. ALL CURBING SHALL BE 5 INCH THICK VERTICAL GRANITE CURB PER VTRANS STANDARD C-10.
3. ALL CURB RADII SHALL BE 5.0' UNLESS OTHERWISE NOTED.
4. IMPRINTED CONCRETE SIDEWALK SCORING PATTERN AND COLOR SHALL MATCH THE EXISTING IMPRINTED CONCRETE SCORING PATTERN AT MAIN STREET & NORTH/SOUTH STREETS INTERSECTION BUMP-OUTS.
5. PREFORMED JOINT FILLER WITH A THICKNESS OF ½" SHALL BE FORMED BETWEEN BUILDINGS AND A THICKNESS OF ¼" AROUND ALL OTHER APPURTENANCES OR FIXED STRUCTURES SUCH AS UTILITY POLES.
6. SEE ROADWAY PLANS FOR LIMITS OF SUPERPAVE BITUMINOUS CONCRETE PAVEMENT.

SCALE IN FEET
10 0 5 10 20 40

PROJECT NAME: BRISTOL	
PROJECT NUMBER: STP PC20(2)	
FILE NAME: 425097_DATA.dwg	PLOT DATE: 10/4/2019
PROJECT LEADER: L. CONGER	DRAWN BY: G. ORGANEK
DESIGNED BY: G. ORGANEK	CHECKED BY: M. MEARS
SITE PLAN SHEET 1	SHEET 157 OF 174

MAIN STREET NORTH

REMOVING AND RESETTING CURB
STA. 21+75 LT TO STA. 23+46 LT
STA. 23+60 LT TO STA. 23+90 LT
STA. 24+07 LT TO STA. 24+58 LT

PORTLAND CEMENT CONCRETE SIDEWALK, 5 INCH
STA. 22+26 LT TO STA. 22+47 LT
STA. 22+86 LT TO STA. 23+09 LT
STA. 23+59 LT TO STA. 23+70 LT
STA. 23+90 LT/RT TO STA. 24+07 LT/RT
STA. 24+20 LT TO STA. 24+32 LT

SPECIAL PROVISION (ORNAMENTAL STREET LIGHT POLE BASE)
STA. 22+41 LT
STA. 23+03 LT
STA. 23+64 LT
STA. 24+26 LT

MAIN STREET NORTH

SPECIAL PROVISION (IMPRINTED CONCRETE SIDEWALK, 5 INCH)
STA. 21+75 LT TO STA. 23+45 LT
STA. 23+60 LT TO STA. 24+57 LT

MAIN STREET SOUTH

SPECIAL PROVISION (ORNAMENTAL STREET LIGHT POLE BASE)
STA. 2+10 RT
STA. 2+77 RT
STA. 3+42 RT
STA. 4+00 RT

VERTICAL GRANITE CURB
STA. 1+50 RT TO STA. 2+57 RT
STA. 2+75 RT TO STA. 3+13 RT
STA. 3+34 RT TO STA. 4+36 RT

MAIN STREET SOUTH

PORTLAND CEMENT CONCRETE SIDEWALK, 5 INCH
STA. 1+50 RT TO STA. 2+57 RT
STA. 2+75 RT TO STA. 3+13 RT
STA. 3+34 RT TO STA. 4+42 RT

SPECIAL PROVISION (IMPRINTED CONCRETE SIDEWALK, 5 INCH)
STA. 1+50 RT TO STA. 2+56 RT
STA. 2+75 RT TO STA. 3+13 RT
STA. 3+35 RT TO STA. 3+50 RT
STA. 3+60 RT TO STA. 4+36 RT

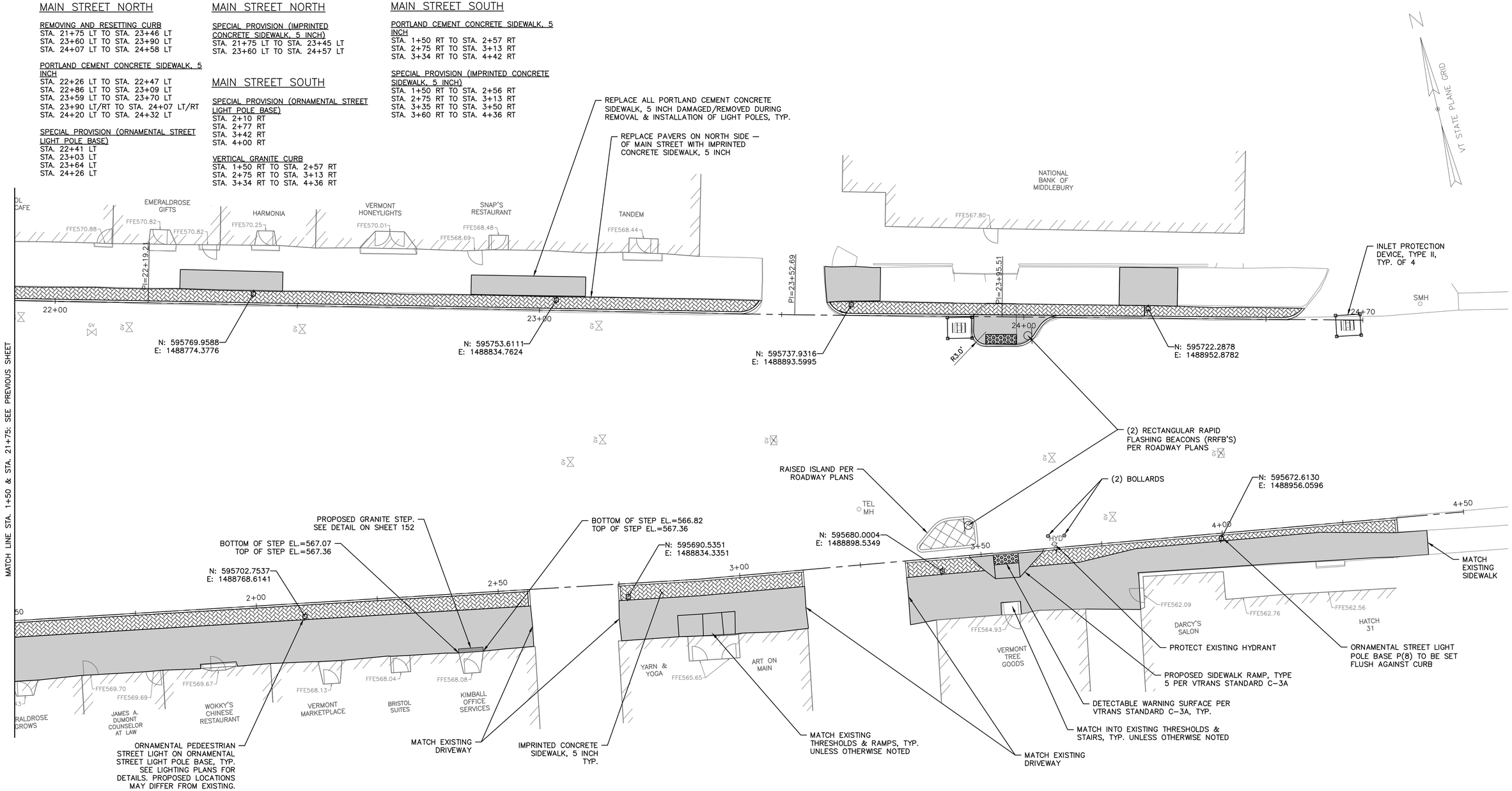

NOTES:

1. ALL SIDEWALK RAMPS SHALL BE TYPE 5 PER STANDARD C-3A. EXAMPLE 1 (WHEN SHOWN WITH TWO CURB TRANSITIONS), OR WHEN ABUTTING A PROPOSED CURB, SHALL BE A MIXTURE OF TYPE 5 AND TYPE 3.
2. ALL CURBING SHALL BE 5 INCH THICK VERTICAL GRANITE CURB PER VTRANS STANDARD C-10.
3. ALL CURB RADII SHALL BE 5.0' UNLESS OTHERWISE NOTED.
4. IMPRINTED CONCRETE SIDEWALK SCORING PATTERN AND COLOR SHALL MATCH THE EXISTING IMPRINTED CONCRETE SCORING PATTERN AT MAIN STREET & NORTH/SOUTH STREETS INTERSECTION BUMP-OUTS.
5. PREFORMED JOINT FILLER WITH A THICKNESS OF ½" SHALL BE FORMED BETWEEN BUILDINGS AND A THICKNESS OF ¼" AROUND ALL OTHER APPURTENANCES OR FIXED STRUCTURES SUCH AS UTILITY POLES.
6. SEE ROADWAY PLANS FOR LIMITS OF SUPERPAVE BITUMINOUS CONCRETE PAVEMENT.

SCALE IN FEET
10 0 5 10 20 40

PROJECT NAME: BRISTOL	
PROJECT NUMBER: STP PC20(2)	
FILE NAME: 425097_DATA.dwg	PLOT DATE: 10/4/2019
PROJECT LEADER: L. CONGER	DRAWN BY: G. ORGANEK
DESIGNED BY: G. ORGANEK	CHECKED BY: M. MEARS
SITE PLAN SHEET 2	SHEET 158 OF 174

MAIN STREET NORTH

SPECIAL PROVISION (ORNAMENTAL PEDESTRIAN STREET LIGHTS)
P(1) STA 20+51 LT
P(2) STA 21+14 LT
P(3) STA 21+78 LT

MAIN STREET SOUTH

SPECIAL PROVISION (ORNAMENTAL PEDESTRIAN STREET LIGHTS)
P(14) STA 0+22 RT
P(13) STA 0+75 RT
P(12) STA 1+37 RT

SITE LIGHTING LEGEND:

SL — 1-1/2"C. PVC SCHEDULE 40 UNDERGROUND CONDUIT AND CONDUCTORS FOR POLE MOUNTED LUMINAIRES AND RECEPTACLES. SEE PANEL SCHEDULE FOR CIRCUITS AND CONDUCTORS, TYPICAL.

UE — 1-1/2"C. PVC SCHEDULE 40 UNDERGROUND CONDUIT FOR RRFB (RECTANGULAR RAPID FLASH BEACON) POWER (AND WIRING PER MANUFACTURER). SEE PANEL SCHEDULE FOR CIRCUITS AND CONDUCTORS, TYPICAL.

DENOTES POLE MOUNTED GFCI RECEPTACLE

P(1) L — STREET LIGHT: 10FT ORNAMENTAL STERNBERG POLE W/ POST MOUNTED LED LUMINAIRE AND ACCESSORIES. 'P' DENOTES POLE AND (POLE NUMBER 1 – 14) 'L' DENOTES POLE MOUNTED LUMINAIRE, TYPICAL FOR EACH POLE.

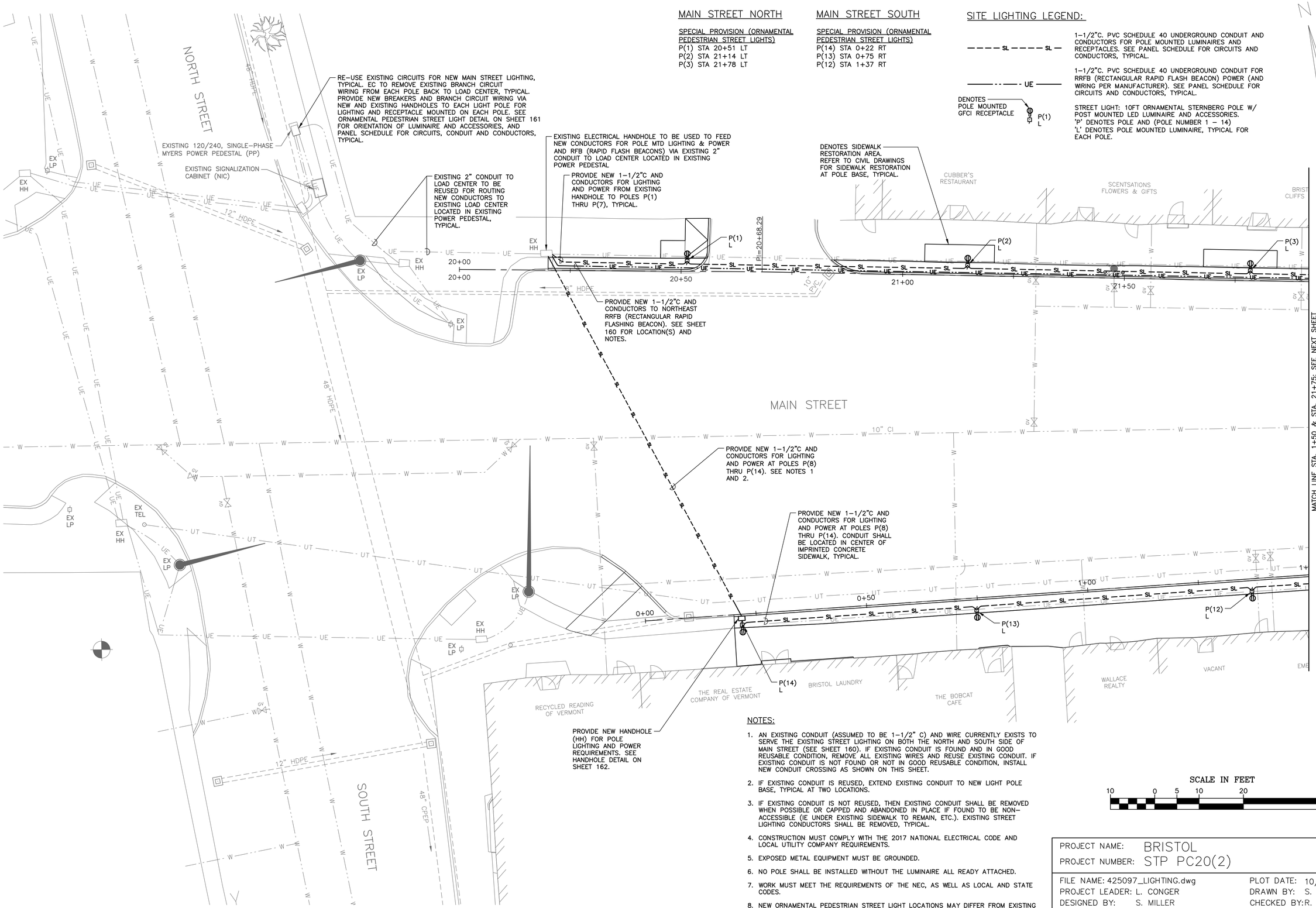

NOTES:

1. AN EXISTING CONDUIT (ASSUMED TO BE 1-1/2" C) AND WIRE CURRENTLY EXISTS TO SERVE THE EXISTING STREET LIGHTING ON BOTH THE NORTH AND SOUTH SIDE OF MAIN STREET (SEE SHEET 160). IF EXISTING CONDUIT IS FOUND AND IN GOOD REUSABLE CONDITION, REMOVE ALL EXISTING WIRES AND REUSE EXISTING CONDUIT. IF EXISTING CONDUIT IS NOT FOUND OR NOT IN GOOD REUSABLE CONDITION, INSTALL NEW CONDUIT CROSSING AS SHOWN ON THIS SHEET.
2. IF EXISTING CONDUIT IS REUSED, EXTEND EXISTING CONDUIT TO NEW LIGHT POLE BASE, TYPICAL AT TWO LOCATIONS.
3. IF EXISTING CONDUIT IS NOT REUSED, THEN EXISTING CONDUIT SHALL BE REMOVED WHEN POSSIBLE OR CAPPED AND ABANDONED IN PLACE IF FOUND TO BE NON-ACCESSIBLE (IE UNDER EXISTING SIDEWALK TO REMAIN, ETC.). EXISTING STREET LIGHTING CONDUCTORS SHALL BE REMOVED, TYPICAL.
4. CONSTRUCTION MUST COMPLY WITH THE 2017 NATIONAL ELECTRICAL CODE AND LOCAL UTILITY COMPANY REQUIREMENTS.
5. EXPOSED METAL EQUIPMENT MUST BE GROUNDED.
6. NO POLE SHALL BE INSTALLED WITHOUT THE LUMINAIRE ALL READY ATTACHED.
7. WORK MUST MEET THE REQUIREMENTS OF THE NEC, AS WELL AS LOCAL AND STATE CODES.
8. NEW ORNAMENTAL PEDESTRIAN STREET LIGHT LOCATIONS MAY DIFFER FROM EXISTING STREET LIGHT LOCATIONS.

SCALE IN FEET
10 0 5 10 20 40

PROJECT NAME: BRISTOL	
PROJECT NUMBER: STP PC20(2)	
FILE NAME: 425097_LIGHTING.dwg	PLOT DATE: 10/4/2019
PROJECT LEADER: L. CONGER	DRAWN BY: S. MILLER
DESIGNED BY: S. MILLER	CHECKED BY: R. KISCHKO
LIGHTING AND ELECTRICAL PLAN SHEET 1	SHEET 159 OF 174

MAIN STREET NORTH

SPECIAL PROVISION (ORNAMENTAL PEDESTRIAN STREET LIGHTS)
P(4) STA 22+41 LT
P(5) STA 23+03 LT
P(6) STA 23+64 LT
P(7) STA 24+26 LT

MAIN STREET SOUTH

SPECIAL PROVISION (ORNAMENTAL PEDESTRIAN STREET LIGHTS)
P(8) STA 2+10 RT
P(9) STA 2+77 RT
P(10) STA 3+42 RT
P(11) STA 4+00 RT

SITE LIGHTING LEGEND:

SL — EXISTING STREET LIGHTING CONDUIT AND CONDUCTORS (ASSUMED LOCATION – TO BE FIELD VERIFIED)

SL — 1–1/2"C. PVC SCHEDULE 40 UNDERGROUND CONDUIT AND CONDUCTORS FOR POLE MOUNTED LUMINAIRES AND RECEPTACLES. SEE PANEL SCHEDULE FOR CIRCUITS AND CONDUCTORS, TYPICAL.

UGE — 1–1/2"C. PVC SCHEDULE 40 UNDERGROUND CONDUIT FOR RRFB (RECTANGULAR RAPID FLASH BEACON) POWER (AND WIRING PER MANUFACTURER). SEE PANEL SCHEDULE FOR CIRCUITS AND CONDUCTORS, TYPICAL.

DENOTES POLE MOUNTED GFCI RECEPTACLE — P(1) L — STREET LIGHT: 10FT ORNAMENTAL STERNBERG POLE W/ POST MOUNTED LED LUMINAIRE AND ACCESSORIES. 'P' DENOTES POLE AND (POLE NUMBER 1 – 14) 'L' DENOTES POLE MOUNTED LUMINAIRE, TYPICAL EACH POLE.

N — VT STATE PLANE GRID

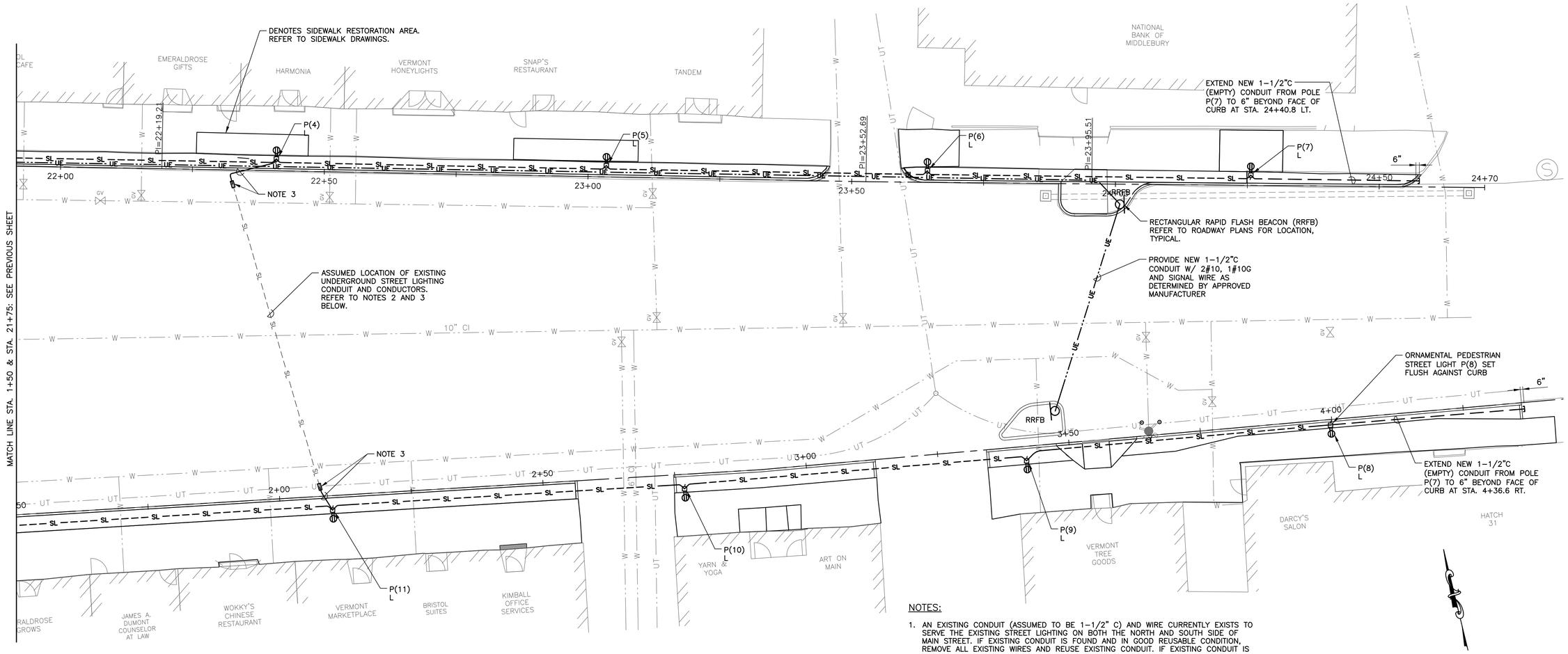

NOTES:

1. AN EXISTING CONDUIT (ASSUMED TO BE 1–1/2" C) AND WIRE CURRENTLY EXISTS TO SERVE THE EXISTING STREET LIGHTING ON BOTH THE NORTH AND SOUTH SIDE OF MAIN STREET. IF EXISTING CONDUIT IS FOUND AND IN GOOD REUSABLE CONDITION, REMOVE ALL EXISTING WIRES AND REUSE EXISTING CONDUIT. IF EXISTING CONDUIT IS NOT FOUND OR NOT IN GOOD REUSABLE CONDITION, INSTALL NEW CONDUIT CROSSING AS SHOWN ON SHEET 159.
2. IF EXISTING CONDUIT IS REUSED, EXTEND EXISTING CONDUIT TO NEW LIGHT POLE BASE, TYPICAL AT TWO LOCATIONS.
3. IF EXISTING CONDUIT IS NOT REUSED, THEN EXISTING CONDUIT SHALL BE REMOVED WHEN POSSIBLE OR CAPPED AND ABANDONED IN PLACE IF FOUND TO BE NON–ACCESSIBLE (IE UNDER EXISTING SIDEWALK TO REMAIN, ETC.). EXISTING STREET LIGHTING CONDUCTORS SHALL BE REMOVED, TYPICAL.
4. CONSTRUCTION MUST COMPLY WITH THE 2017 NATIONAL ELECTRICAL CODE AND LOCAL UTILITY COMPANY REQUIREMENTS.
5. EXPOSED METAL EQUIPMENT MUST BE GROUNDED.
6. NO POLE SHALL BE INSTALLED WITHOUT THE LUMINAIRE ALL READY ATTACHED.
7. WORK MUST MEET THE REQUIREMENTS OF THE NEC, AS WELL AS LOCAL AND STATE CODES.
8. NEW ORNAMENTAL PEDESTRIAN STREET LIGHT LOCATIONS MAY DIFFER FROM EXISTING STREET LIGHT LOCATIONS.

SCALE IN FEET
10 0 5 10 20 40

PROJECT NAME: BRISTOL	
PROJECT NUMBER: STP PC20(2)	
FILE NAME: 425097_LIGHTING.dwg	PLOT DATE: 10/4/2019
PROJECT LEADER: L. CONGER	DRAWN BY: S. MILLER
DESIGNED BY: S. MILLER	CHECKED BY: R. KISCHKO
LIGHTING AND ELECTRICAL PLAN SHEET 2	SHEET 160 OF 174

BUS	100A
PANEL RATING	10 KAIC
SUPPLY VOLTAGE	120/240V, 1Ø
SERVICE	SINGLE PHASE

EXISTING LOAD CENTER 'PP'

LOCATED IN EXISTING MYERS POWER PEDESTAL (PP)

LOCATION	MAIN STREET INTERSECTION (NE CORNER)
MOUNTING	EXISTING MYERS POWER PED AT MAIN INT
DRAWING No.	

WIRING WIRE	WIRING COND	DESCRIPTION	VA OR W ØA	VA OR W ØB	BREAKER POLE	BREAKER A	CKT. NO	BUS CONN		CKT. NO	BREAKER POLE	BREAKER A	VA OR W ØA	VA OR W ØB	DESCRIPTION	WIRING COND	WIRING WIRE
		SPARE	EX		1	30	1	•		2	1	20	EX		EXIST LTG CONTROLS	CU	#12
#6	CU	EXIST SIGNALIZATION		EX	1	20	3		•	4	1	20		EX	EXIST LTS	CU	#12
#12	CU	EXIST LTS @ INTERSECTION	EX		1	20	5	•		6	1	20	**128**		**NEW LITE POLES 1,3,5 & 7**	**1-1/2"**	**2#10 W/ GND**
#12	CU	EXIST LTS @ INTERSECTION		EX	1	20	7		•	8	1	20		**96**	**NEW LITE POLES 2, 4 & 6**	**1-1/2"**	**2#10 W/ GND**
#12	CU	EXIST LTS @ INTERSECTION	EX		1	20	9	•		10	1	20	EX		EXIST LOAD	CU	#12
2#8 W/ GND	**1-1/2'**	**POLE MTD GFI ON P1 THRU P7**		**1260**	**1**	**20**	**11***		•	***12**	**1**	**20**		**1260**	**POLE MTD GFI ON P8 THRU P14**	**1-1/2'**	**2#8 W/ GND**
2#10 W/ GND	**1-1/2"**	**NEW LITE POLES 8, 10, 12 & 14**	**128**		**1**	**20**	**13***	•		***14**	**1**	**20**	**200**		**RFB (RAPID FLASHING BEACON)**	**1-1/2'**	**2#10 W/ GND**
2#10 W/ GND	**1-1/2"**	**NEW LITE POLES 9, 11 & 13**		**96**	**1**	**20**	**15***		•	***16**	**1**	**20**			**SPARE**		
		TOTAL 1	128	1356						TOTAL 2			328	1356			
		TOTAL 2	328	1356													
		TOTAL 1 + 2	456	2712													
		CONN. LOAD TOTAL	3168														
		AMPERES	13														
			(NEW LOADS)														

MAIN BREAKER	N/A
FEEDER ENTRANCE	EXISTING
FEEDER SIZE	EXISTING
SOURCE	UTILITY
PANEL TYPE	EATON POW-R-LINE

MAIN LUGS	EXISTING
ENCLOSURE TYPE	POWER PANEL LOCATED IN PEDESTAL
ACCESSORIES	

'EX - DENOTES EXISTING LOAD (UNKNOWN)

BOLD TEXT W/ ASTERISK (*) DENOTES NEW (WIRE & BREAKER)

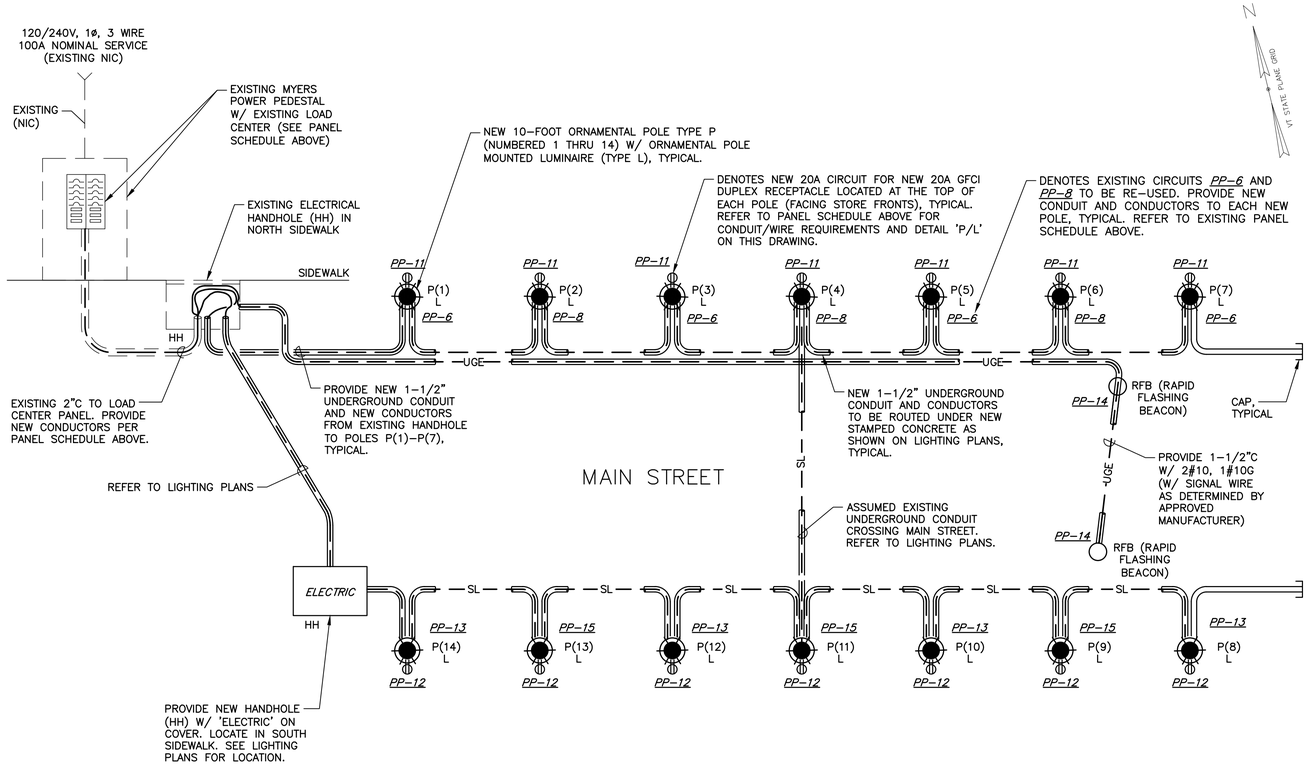

1 SITE LIGHTING RISER DIAGRAM
NOT TO SCALE

GENERAL NOTES:

1. CONDUIT SHALL BE 1-1/2" SCHEDULE 40 PVC @ 24" BELOW FINISHED GRADE.
2. CONDUCTORS SHALL BE #8 OR #10AWG CU TYPE THHN/THWN W/ GROUND PER PANEL SCHEDULE ON THIS DRAWING.
3. MAXIMUM OF 270° IN TOTAL BENDS PERMITTED IN SINGLE RUN OF CONDUIT.
4. CIRCUIT CONDUCTORS INCLUDING NEUTRAL CONDUCTOR SHALL BE CLEARLY IDENTIFIED BY CORROSION RESISTANT TAGS INDICATING CIRCUIT NUMBER AND PANEL SOURCE AT EVERY POLE BASE AND HAND HOLE (HH).
5. SPLICES SHALL BE WATERTIGHT AND UL LISTED.
6. TEMPORARY LIGHTING SHALL BE INCIDENTAL TO 641.11 TRAFFIC CONTROL, ALL INCLUSIVE.

STERNBERG MODEL NUMBER:

MODEL #:
PT-1130ALED-5P-1RND45T3-MDL03-A-4510FP4-.188-PGT-20AGFI-LPIUC-DHPA-FH
(HEIGHT, FINISH AND LED COLOR TEMPERATURE SHALL MATCH BRISTOL STANDARD)

PT	POST TOP MOUNTED
1130ALED	RIPON SERIES POLE MOUNTED LED FIXTURE
5P	DECORATIVE FITTER (FITS 3" O.D. X 3" TALL TENON/POLE)
1RND45T3	1RND (32W LED ENGINE), 45 (COLOR TEMPERATURE), T3 (TYPE III DISTRIBUTION)
MDL03	120V-277V, 350mA DRIVER
A	TEXTURED ACRYLIC LENS
4510FP4	45 (4500 DECATUR) 10 (10 FT HIGH), FP4 (FLUTED STRAIGHT 4" DIA)
.188	GUAGE .188"
PGT	FINISH: PARK GREEN TEXTURED (BRISTOL STANDARD)

ACCESSORIES:

20AGFI	20A GROUND FAULT DUPLEX RECEPTACLE)
LPIUC	LP (LOW PROFILE), IUC (IN-USE COVER)
DHPA	DOUBLE HOOKED PLANTER ARM (MOUNTS ON BOTH SIDES OF POLE SHAFT)
FH	FLAG HOLDER. MOUNTS TO SIDE OF POLE SHAFT (HEAVY-WALL ALUMINUM)

WIND LOAD EVALUATION: THIS ASSEMBLY, AS CONFIGURED, MEETS AASHTO REQUIREMENTS FOR WIND LOADING.
WIND SPEED: 90MPH
GUST FACTOR: 1.14

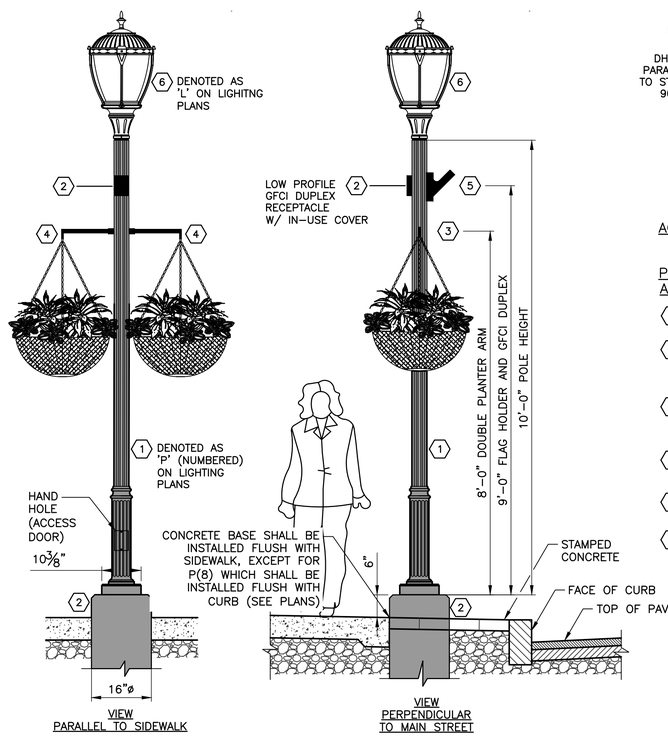

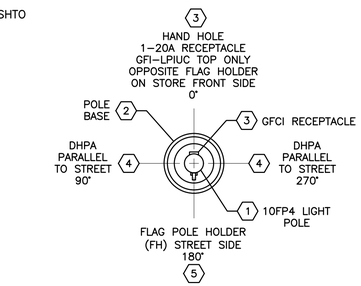

PLAN VIEW
ACCESSORY MOUNTING LOCATIONS

POLE AND POLE MOUNTED ACCESSORIES KEY NOTES:

1. 10FP4: 10' H X 4" STRAIGHT, FLUTED DECATOR, PARK GREEN TEXTURED FINISH.
2. BASE: SMOOTH, 16" DIAMETER CONCRETE POLE BASE W/ 1/2" CHAMFER ALL-AROUND, TYPICAL.
3. GFCI: 20A GFCI DUPLEX RECEPTACLE W/ IN-USE COVER, LOW-PROFILE STYLE. MOUNTED @ 9' AFG.
4. DHPA: POLE MOUNTED DOUBLE HOOKED PLANTER ARM. MOUNTED @ 8' AFG.
5. FH: FLAG HOLDER (FH). MOUNTED @ 9' AFG 180°/STREET SIDE.
6. LUMINAIRE: 1130ALED RIPON, 30W, TYPE III DISTRIBUTION, COLOR TEMPERATURE TO MATCH TOWN OF BRISTOL STANDARD (4500K), ACRYLIC LENS, CAST ALUMINUM ROOF IN PARK GREEN TEXTURED FINISH.

POLE ASSEMBLY MANUFACTURER

STERNBERG LIGHTING
5 LAWRENCE AVENUE
ROSELLE, IL 60172

PHONE: 800-621-3376
www:sternberglighting.com

LOCAL MANUFACTURER'S REPRESENTATIVE

VISIBLE-LIGHT INC
SCOTT KIMBALL, LC
skimball@visible-light.net

CELL: 603-918-6496
www.visible-light.net

P/L ORNAMENTAL PEDESTRIAN STREET LIGHT DETAIL
SCALE: 1" = 10'-0"

PROJECT NAME:	BRISTOL
PROJECT NUMBER:	STP PC20(2)

FILE NAME: 425097_LIGHTING.dwg	PLOT DATE: 10/4/2019
PROJECT LEADER: L. CONGER	DRAWN BY: S. MILLER
DESIGNED BY: S. MILLER	CHECKED BY: R. KISCHKO
LIGHTING AND ELECTRICAL DETAIL SHEET 1	SHEET 161 OF 174

COVER TO BE HELD IN PLACE BY 2 (OR 4) STAIN-LESS STEEL HEX HEAD BOLTS (NOT SHOWN)

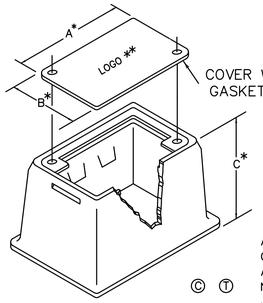

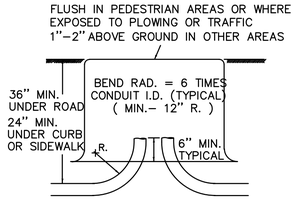

ALL JUNCTION BOXES SHALL HAVE EITHER STRAIGHT OR TAPERED SIDES (SMALLER SQUARE OR RECT-ANGULAR DIMENSION AT THE TOP). THERE SHALL BE NO OUTWARD PROTRUDING LIPS AT THE TOP OF THE JUNCTION BOX.

* DIMENSIONS A THRU C AS SHOWN ON THE PLANS. (MINIMUM 18" X 12" X 12" OR AS REQUIRED BY THE NATIONAL ELECTRICAL CODE)

(SHAPE MAY VARY SLIGHTLY WITH MANUFACTURER)

HH TYPICAL HAND HOLE (VTRANS JUNCTION BOX)
NOT TO SCALE

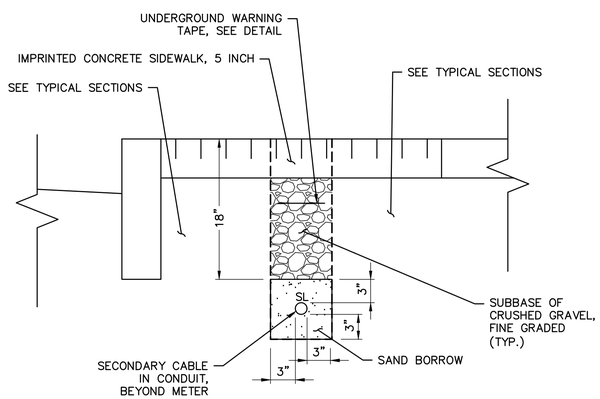

TS1 TYPICAL TRENCH SECTION 1: BENEATH IMPRINTED CONCRETE SIDEWALK, SOUTH SIDE
NOT TO SCALE

PARTIAL UNDERGROUND CONDUIT LEGEND:

○ ELECTRICAL CONDUIT:
SL – 1-1/2" UNDERGROUND CONDUIT FOR SITE LIGHTING AND POWER FOR POLE MOUNTED RECEPTACLES.
UGE – 1-1/2" UNDERGROUND CONDUIT FOR RECTANGULAR RAPID FLASHING BEACON (RRFB) POWER AND SIGNAL WIRING.

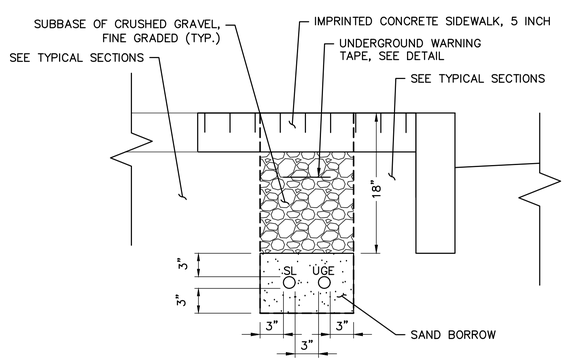

TS2 TYPICAL TRENCH SECTION 2: BENEATH IMPRINTED CONCRETE SIDEWALK, NORTH SIDE
NOT TO SCALE

PARTIAL UNDERGROUND CONDUIT LEGEND:

○ ELECTRICAL CONDUIT:
SL – 1-1/2" UNDERGROUND CONDUIT FOR SITE LIGHTING AND POWER FOR POLE MOUNTED RECEPTACLES.
UGE – 1-1/2" UNDERGROUND CONDUIT FOR RECTANGULAR RAPID FLASHING BEACON (RRFB) POWER AND SIGNAL WIRING.

UNDERGROUND WARNING TAPE

SIZE – 6" WIDE
COLOR – BLACK TEXT ON RED BACKGROUND
MATERIAL – POLYETHYLENE

WT TYPICAL UNDERGROUND WARNING TAPE
NOT TO SCALE

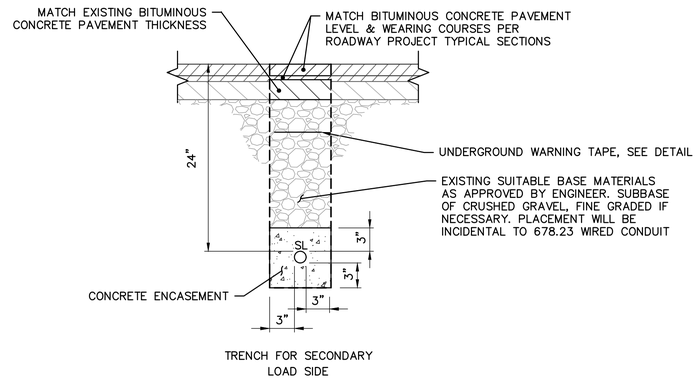

NOTE:

1. CONCRETE ENCASEMENT SHALL EXTEND 5' BEYOND EDGE OF PAVEMENT, TYP

TS3 TYPICAL TRENCH SECTION 3: ACROSS DRIVEWAYS & ROAD, 1 CONDUIT
NOT TO SCALE

PARTIAL UNDERGROUND CONDUIT LEGEND:

○ ELECTRICAL CONDUIT:
SL – 1-1/2" UNDERGROUND CONDUIT FOR SITE LIGHTING AND POWER FOR POLE MOUNTED RECEPTACLES.
UGE – 1-1/2" UNDERGROUND CONDUIT FOR RECTANGULAR RAPID FLASHING BEACON (RRFB) POWER AND SIGNAL WIRING.

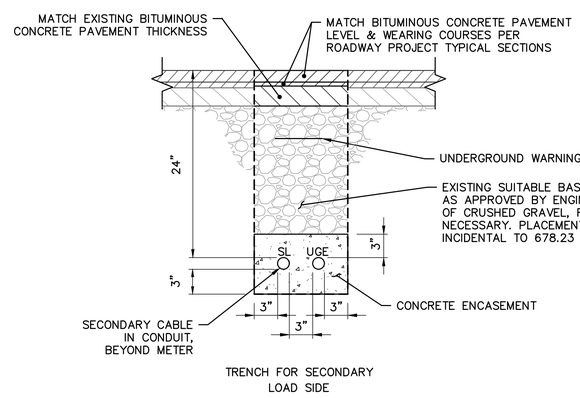

NOTE:

1. CONCRETE ENCASEMENT SHALL EXTEND 5' BEYOND EDGE OF PAVEMENT, TYP

TS4 TYPICAL TRENCH SECTION 4: ACROSS DRIVEWAYS & ROAD, 2 CONDUITS
NOT TO SCALE

PARTIAL UNDERGROUND CONDUIT LEGEND:

○ ELECTRICAL CONDUIT:
SL – 1-1/2" UNDERGROUND CONDUIT FOR SITE LIGHTING AND POWER FOR POLE MOUNTED RECEPTACLES.
UGE – 1-1/2" UNDERGROUND CONDUIT FOR RECTANGULAR RAPID FLASHING BEACON (RRFB) POWER AND SIGNAL WIRING.

ORNAMENTAL STREET LIGHT POLE BASE AND GENERAL NOTES:

1. ALL CONCRETE BASES TO BE ROUND PRECAST CONCRETE, CLASS B, AND SHALL HAVE A SMOOTH LEVEL TOP SURFACE FINISHED WITH A 1/2" RADIUS EDGING TOOL.
2. TEMPLATE FOR ANCHOR BOLTS, STAINLESS STEEL ANCHOR BOLTS, NUTS AND WASHERS TO BE OBTAINED BY CONTRACTOR PRIOR TO CONSTRUCTION OF BASES.
3. SCORE TOP OF CONCRETE BASE TO SHOW LOCATION OF CONDUIT(S).
4. ALL EXPOSED METAL HARDWARE SHALL BE STAINLESS STEEL.
5. THE MINIMUM RADIUS FOR RIGID METALLIC OR NONMETALLIC ELECTRICAL CONDUIT SHALL BE SIX TIMES THE INSIDE DIAMETER OF THE CONDUIT.

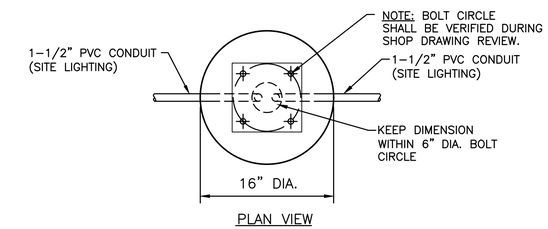

PLAN VIEW

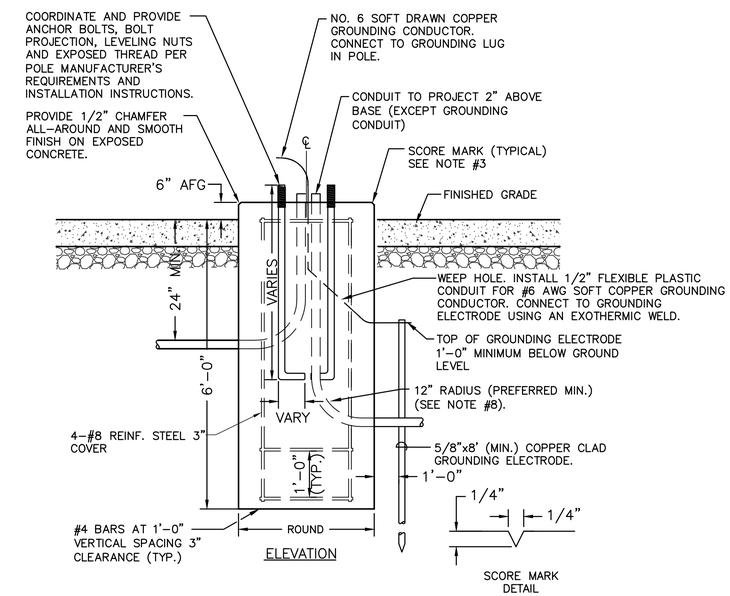

PB TYPICAL ORNAMENTAL STREET LIGHT POLE BASE
NOT TO SCALE

ORNAMENTAL STREET LIGHT POLE BASE FINISH WORK NOTES:

1. GRIND, MILL OR OTHERWISE REMOVE PROJECTING CONCRETE IRREGULARITIES ON THE NEW ORNAMENTAL STREET LIGHT POLE BASE TO PROVIDE A SMOOTH FINISH ALL-AROUND THE BASE AND ON THE TOP OF THE POLE BASE TO CREATE A SMOOTH AND LEVEL SURFACE FOR THE INSTALLATION OF THE LIGHT POLE BASE AND ANCHORS. PROVIDE A 1/2" CHAMFER ALL-AROUND EDGE OF BASE TO REDUCE DAMAGE AND CHIPPING, TYPICAL.

PROJECT NAME: BRISTOL	
PROJECT NUMBER: STP PC20(2)	
FILE NAME: 425097_LIGHTING.dwg	PLOT DATE: 10/4/2019
PROJECT LEADER: L. CONGER	DRAWN BY: S. MILLER
DESIGNED BY: S. MILLER	CHECKED BY: R. KISCHKO
LIGHTING AND ELECTRICAL DETAIL SHEET 2	SHEET 162 OF 174

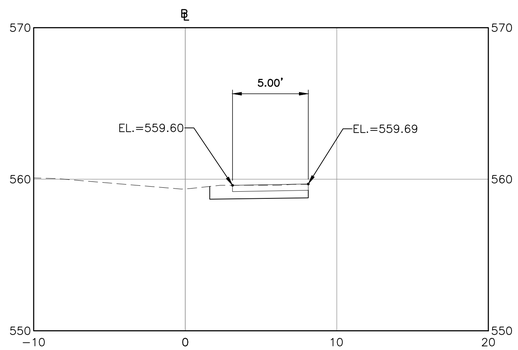

STA. 4+40

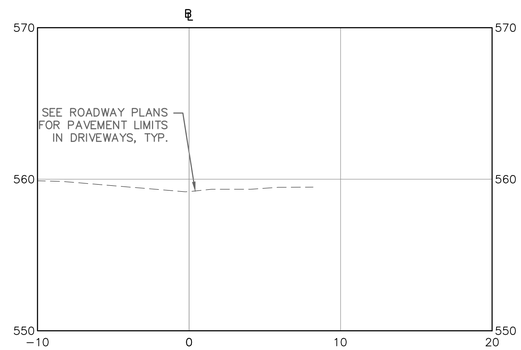

STA. 4+45

SCALE IN FEET

0 5 10

PROJECT NAME: BRISTOL	
PROJECT NUMBER: STP PC20(2)	
FILE NAME: 425097_DATA.dwg	PLOT DATE: 10/4/2019
PROJECT LEADER: L. CONGER	DRAWN BY: G. ORGANEK
DESIGNED BY: G. ORGANEK	CHECKED BY: M. MEARS
SOUTH SIDEWALK CROSS SECTION SHEET 8	SHEET 174 OF 174